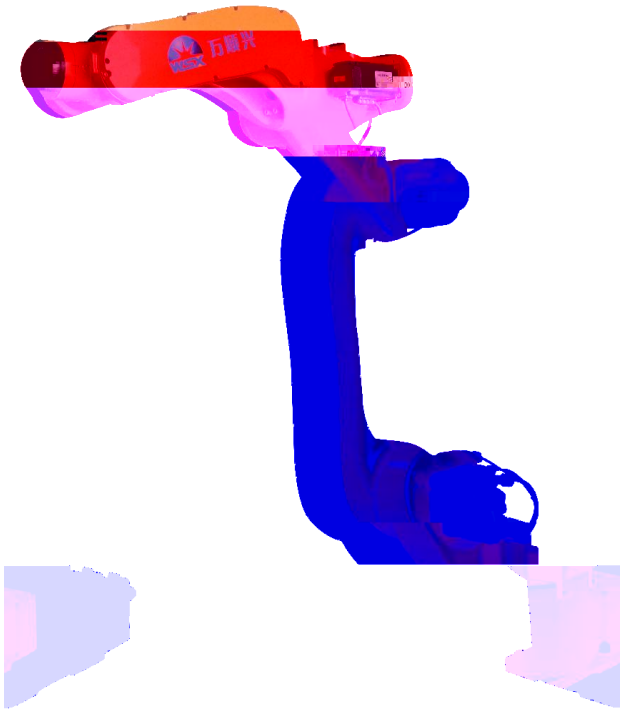



1
1
2
4

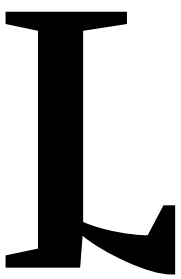

.....2
.....2

.....2
.....3

.....3
.....3
.....3

.....3
.....3
.....3
.....3
.....3
.....3



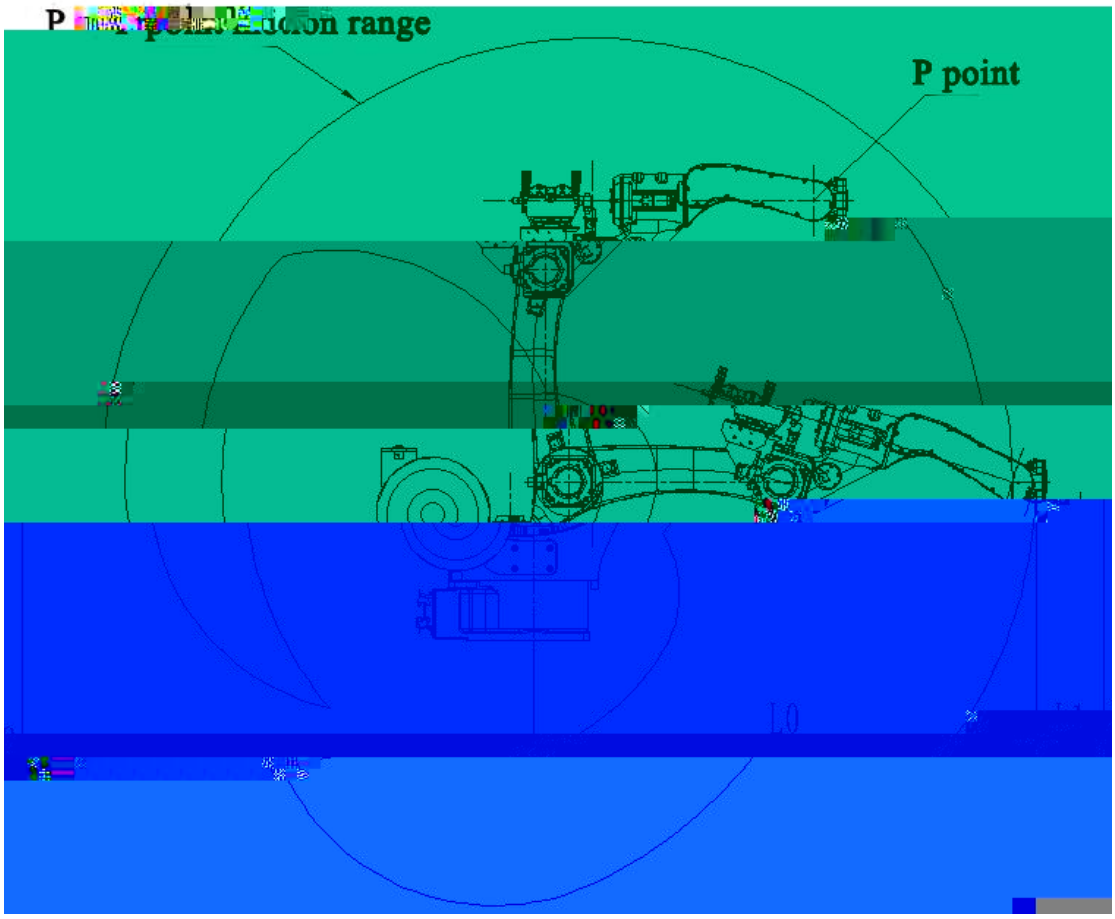
P point

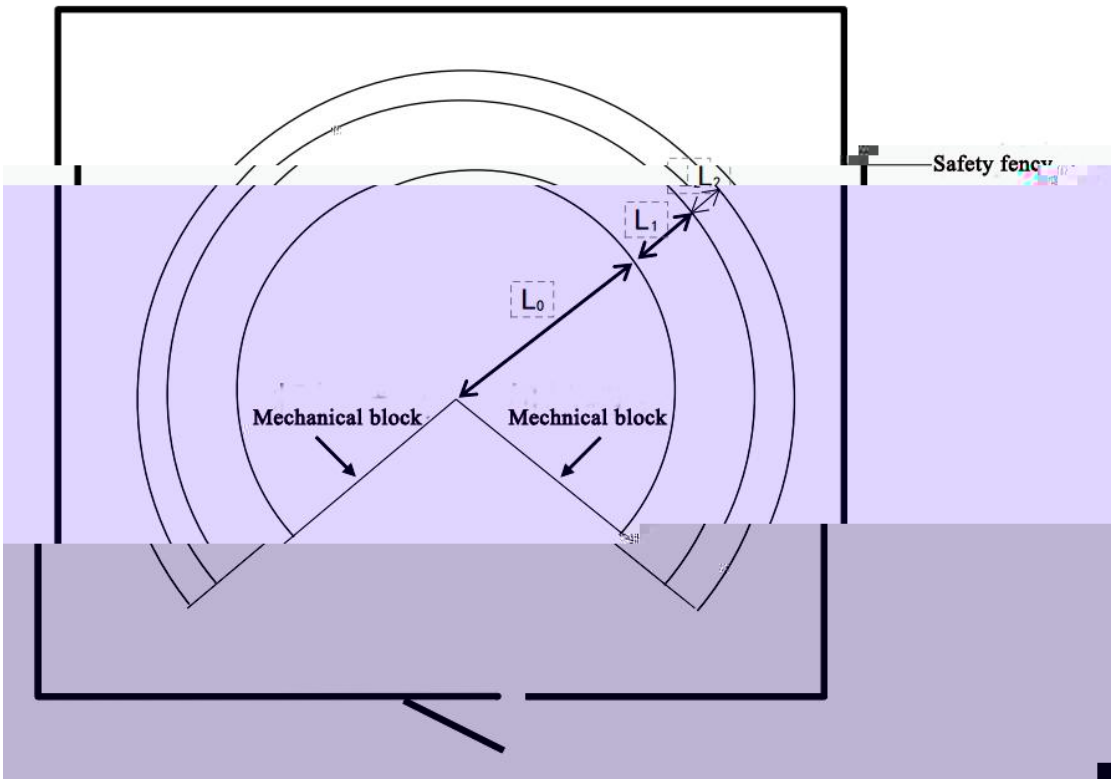
Safety fence
L2
L1
L0
Mechanical block
Mechnical block

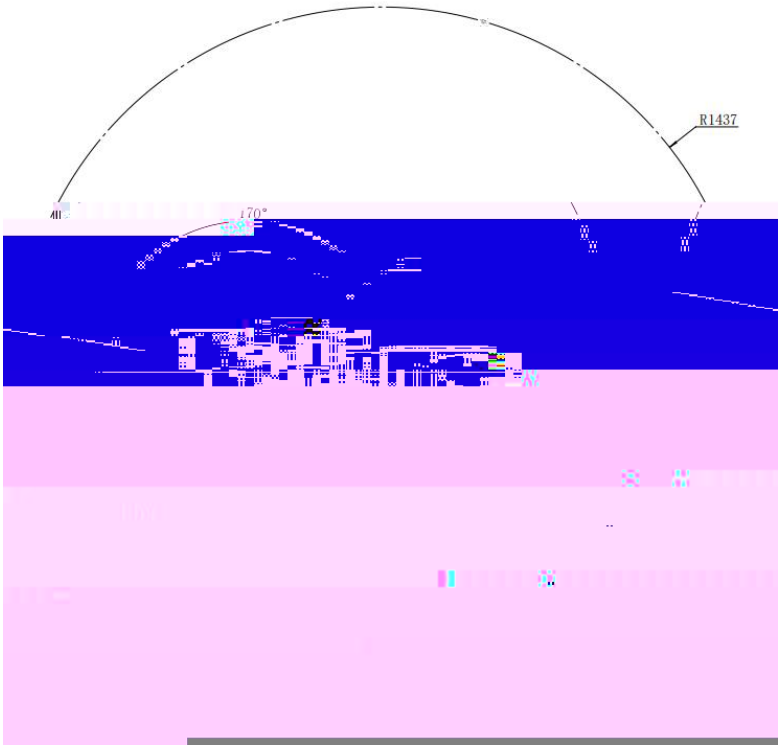
R1437
170°

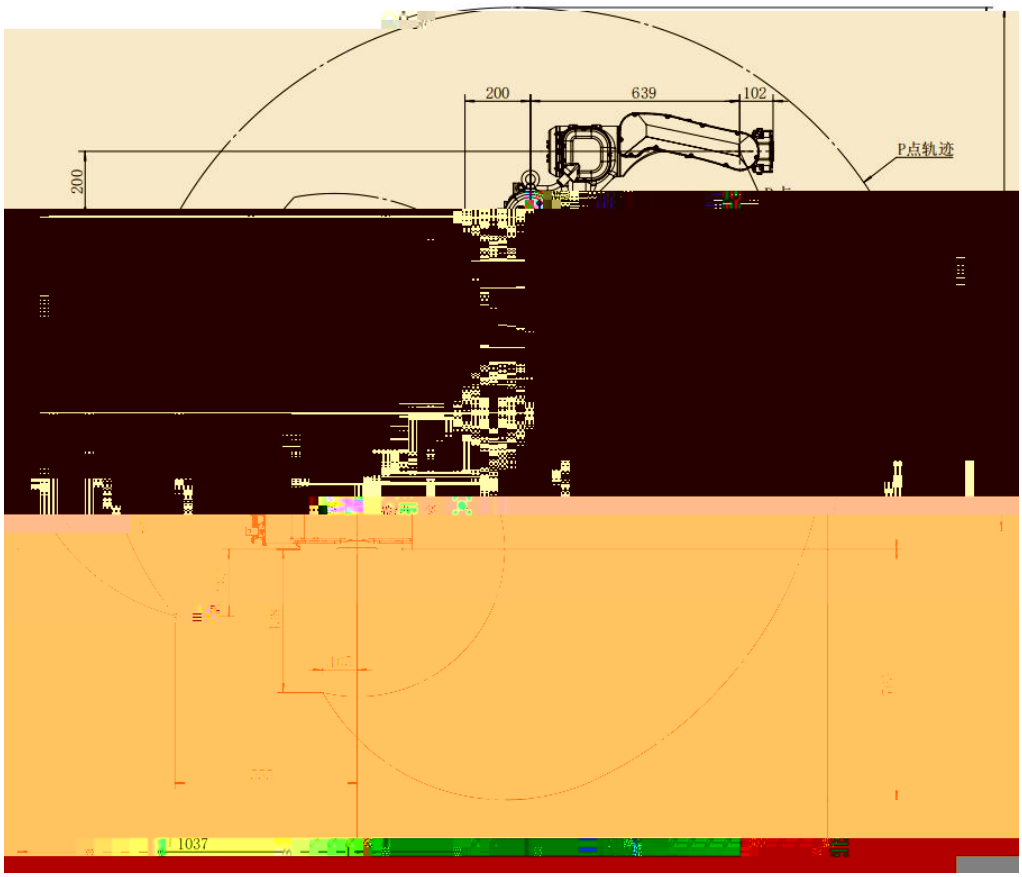
200
639
102
P点轨迹
200
1037

	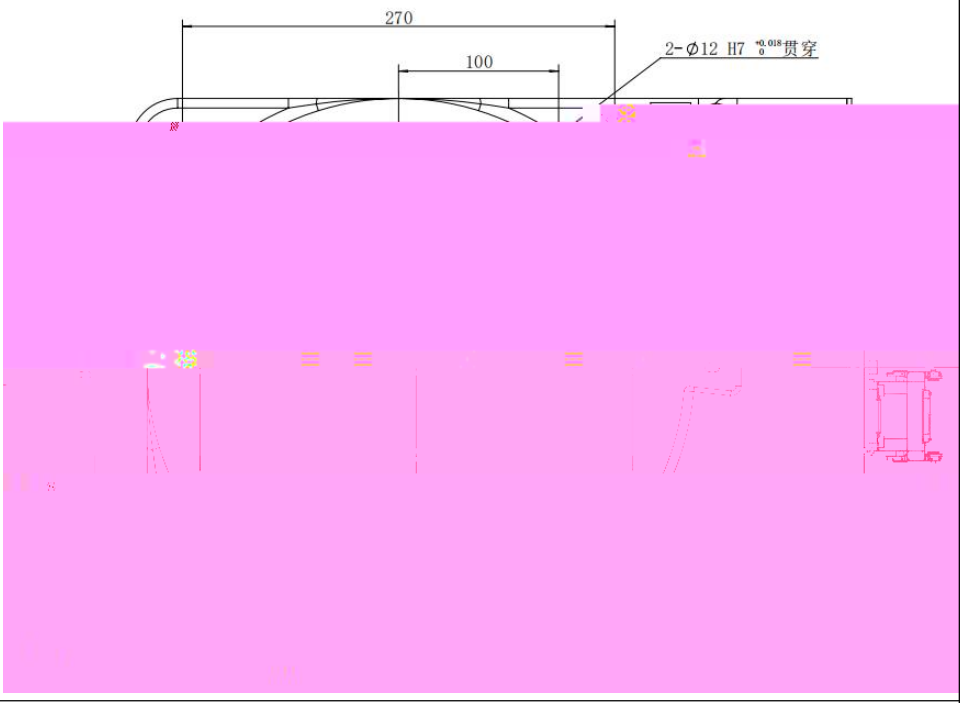 270 100 2-Ø12 H7 $^{+0.018}_{0}$贯穿
	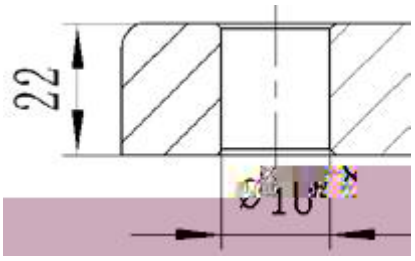 22 Ø10

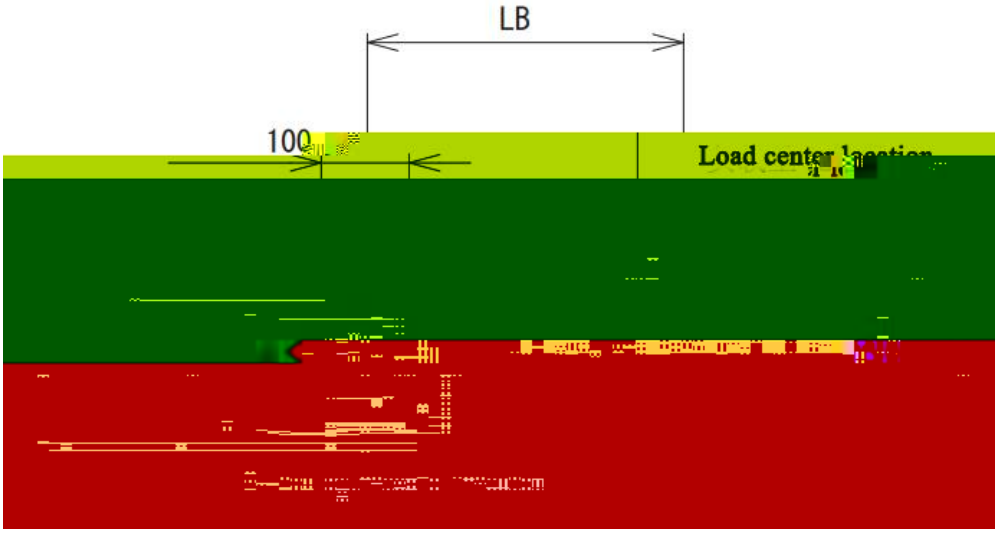
LB
100
Load center location

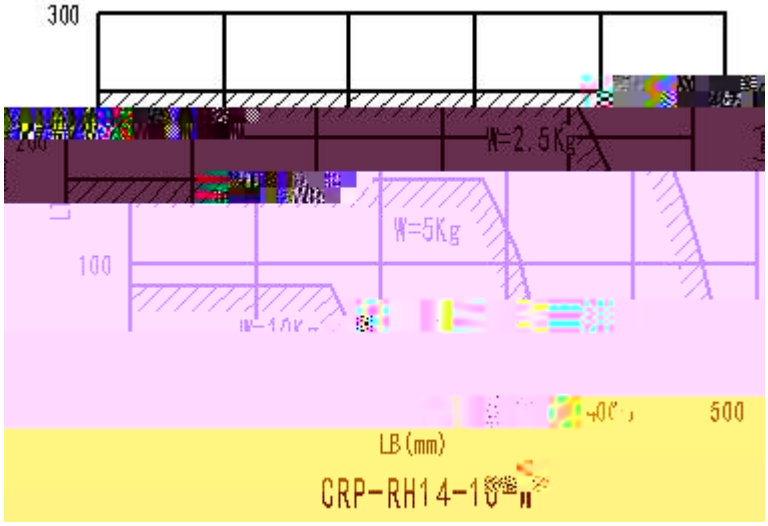
300
W=2.5Kg
W=5Kg
100
500
LB(mm)

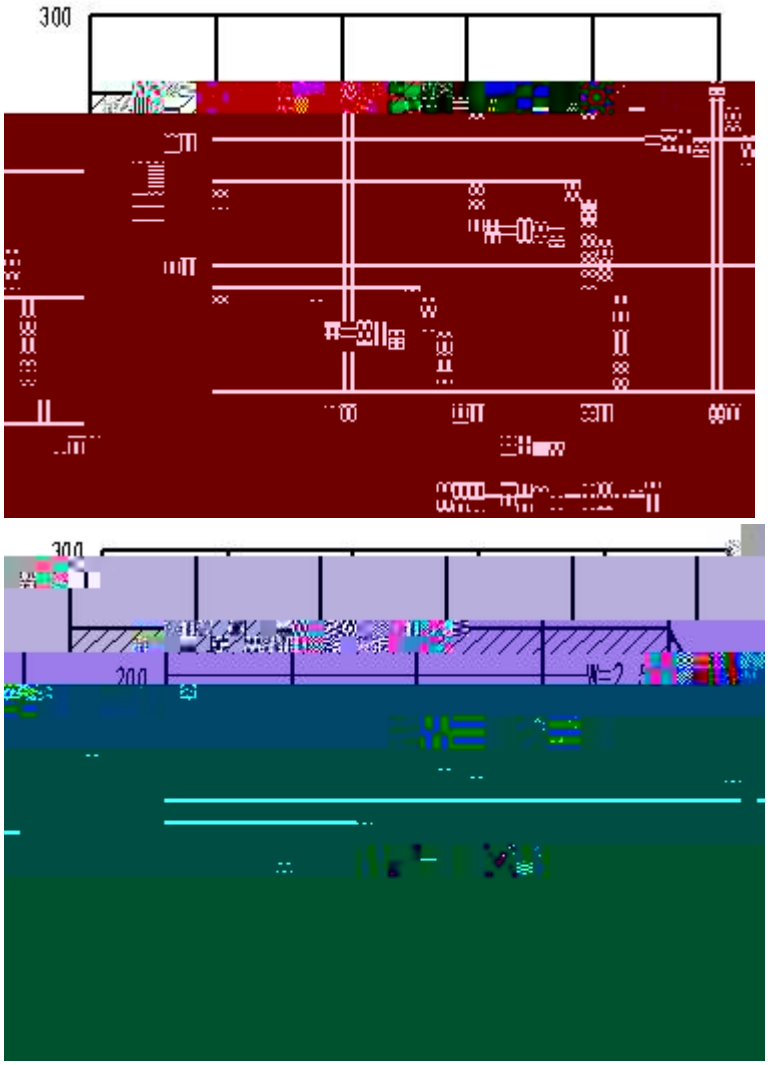
300
300
200

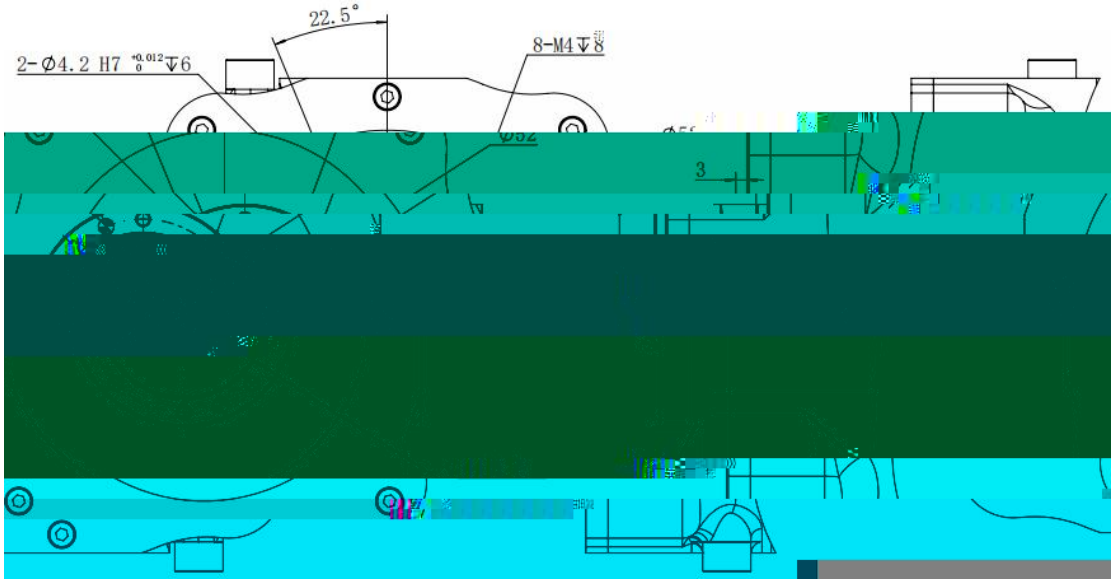
22.5°
8-M4↧8
2-Φ4.2 H7 +0.012 0 ↧6
Φ52
3

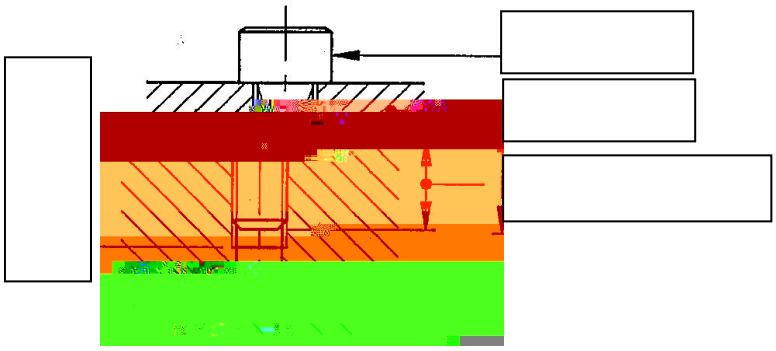

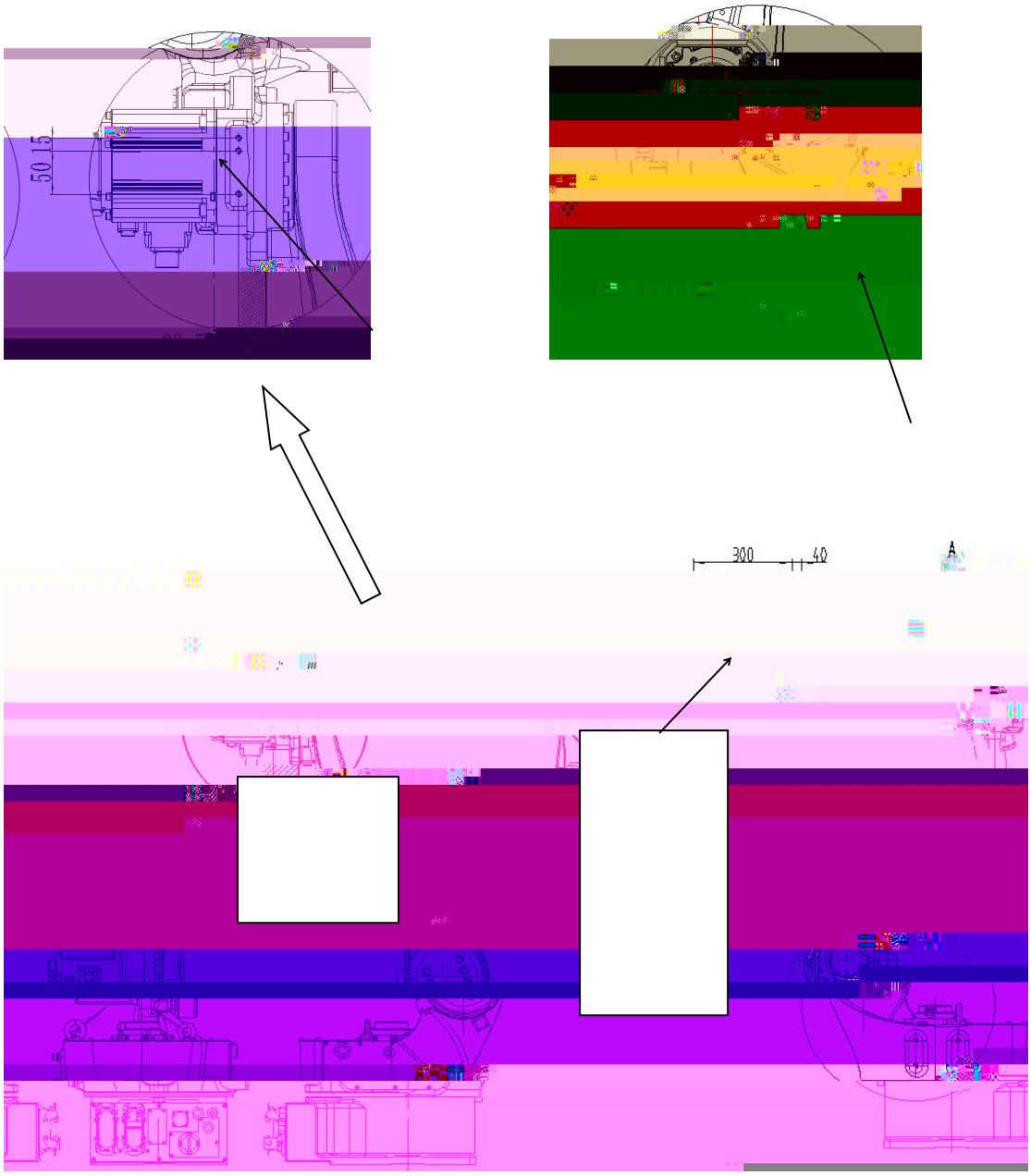
50.15
300
40
A

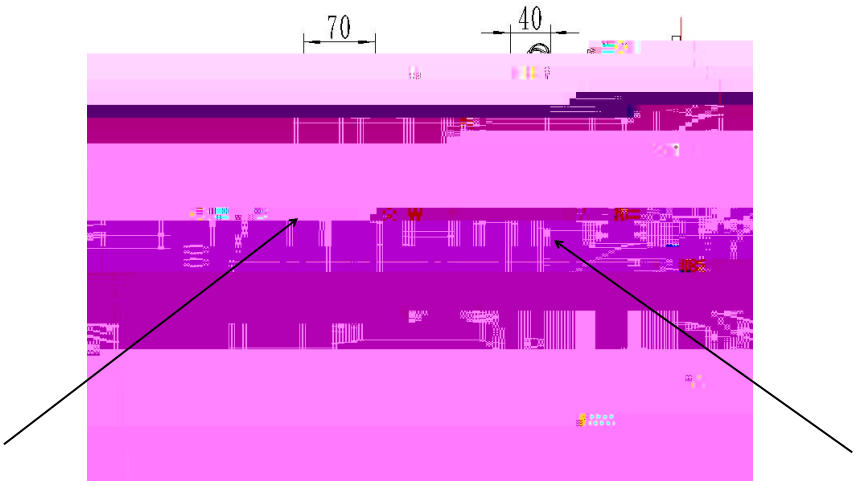
70
40



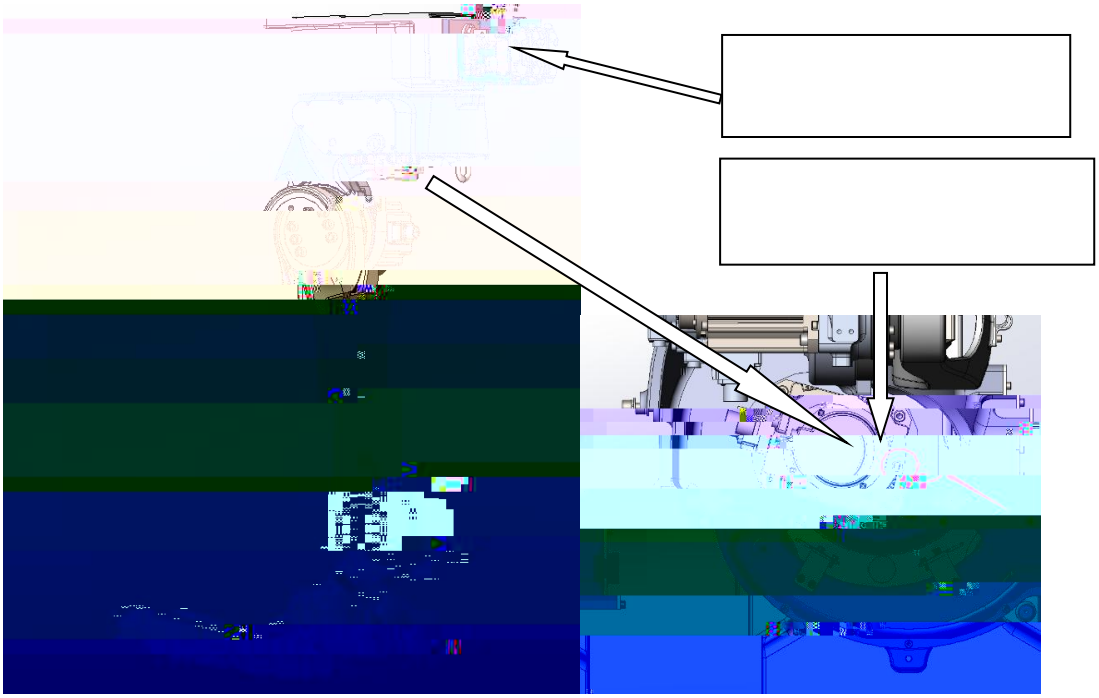

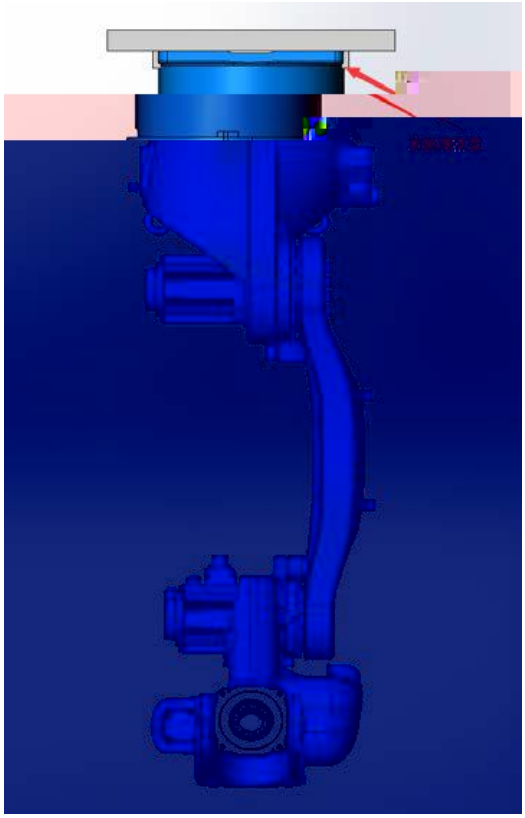


Jog
Stop
jog


J5轴: -90.0000
J6轴: 0.000
Jog
Stop
Monitor
Set all joints to zero
ve the robot to the zero p
16:0
Tues


Jog
Stop
jog
Stop

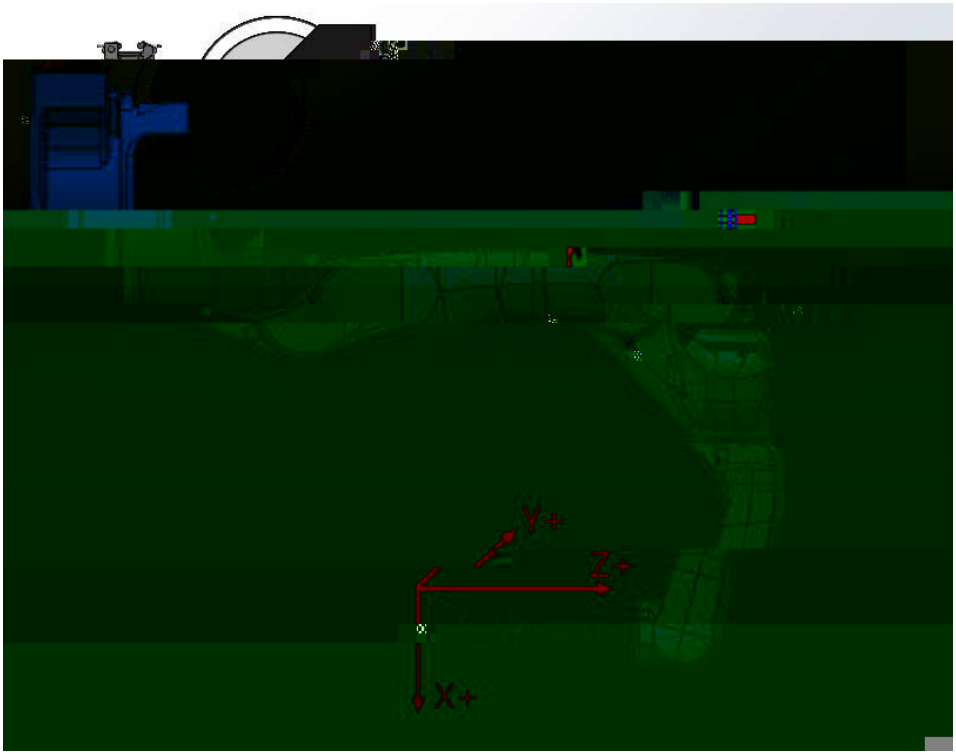
Y+
Z+
X+

